505 — Ruggedized Shaft encoder, Incremental

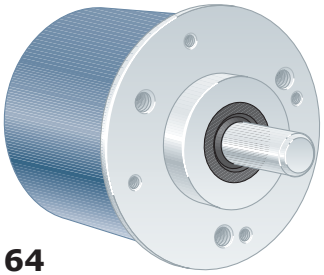

64

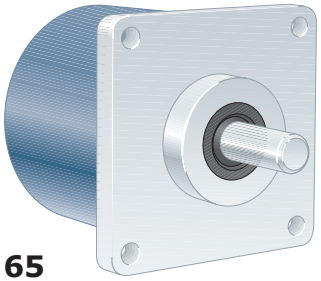

65

Short description:

>> 6 short-circuit protected outputs

>> IP 67 at housing, IP 66 at shaft inlet

>> 5 Vdc or 9...30 Vdc

>> Robust housing for harsh environment

>> Shock and vibration protected

Suitable applications:

>> Imperial measurements

>> Industrial applications

General information

Encoder data		
Type	RSI 505	
Operating temperature	-40°C .. +70°C	
Storage temperature	-30°C .. +70°C	
Ingress protection class	IP-67 according to IEC 60529	
At shaft inlet	IP-66 according to IEC 60529	
Vibration (55 to 2000Hz)	< 300 m/s^2 according to IEC 60068-2-6[(1)]	
Shock (6ms)	< 2000 m/s^2 according to IEC 60068-2-27	
Cover material	Aluminium	
Cover surface treatment	Coated and cromated or anodized	
Weight	Approx. 300g	
Accuracy and resolution		
Line count	1..5000 ppr	5001..10 000 ppr
Dividing error	± 50 ºel	± 90 ºel
Channel separation	90 ± 25 ºel	90 ± 45 ºel
Measuring steps	4 x Line count	

Flange option

Flange type	64, Round	65, Square
Outer geometry	ø63.5 mm	□63.5 mm
Mounting holes	3 x UNF 10x32 4 x UNC 4x40	4 x 5.2mm
Flange material	Aluminium	Aluminium
Surface treatment	Anodized	Anodized

Shaft option

Shaft type	Ø 8 round	Ø 9.52 round	Ø 10 with face
Axial shaft load	50 N	50 N	50 N
Radial shaft load	60 N	60 N	60 N
Mech. permissible speed	6000 rpm (12 000)	6000 rpm (12 000)	6000 rpm (12 000)
Shaft material	Stainless steel	Stainless steel	Stainless steel
Moment of inertia	1,9 x 10^{-6} kgm^2	1,9 x 10^{-6} kgm^2	2,0 x 10^{-6} kgm^2

[(1)]<150m/s^2 on encoders with connectors

505 — Ruggedized Shaft encoder, Incremental

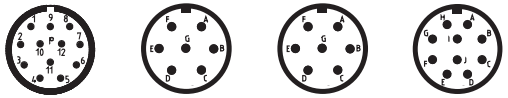

Connection option

Connector type	Cable	12 pin EML	7 pin MS	7 pin MS sp	10 pin MS
Function	***Colour***	***PIN***	***PIN***	***PIN***	***PIN***
S00	Green	5	A	A	A
S00 inverted	Blue	6	NA	C	G
S90	Yellow	8	B	B	B
S90 inverted	Black	1	NA	E	H
Sref	Red	3	C	NA	C
Sref inverted	Brown	4	NA	NA	I
+E Volt	Violet	12	D	D	D
0 Volt	White	10	F	F	F
STATUS	Gray	7	NA	NA	NA
Sensor +E Volt	NA	NA	NA	NA	E
Case	Shield				

Electrical option

Power supply	5 V ±10%	9-30 V	
Polarity protected	No	Yes	
Output signals	TTL[1]	HTL	RS-422
Short circuit protected	Yes	Yes	Yes
Current consumption	45 mA	50 mA at 24Vdc	25 mA at 24Vdc
Max consumption	75 mA	75 mA	40 mA
Output load (max)	±20 mA	±40 mA	±20 mA
Output frequency (max)	300 kHz	300 kHz	300 kHz
U_{high} at 10mA load	> 3.0 V	> +EV - 2.0 V	> 3.0 V
U_{low} at 10mA load	< 0.4 V	< 1.15 V	< 0.4 V
Cable length (max)	50 m	200 m @ 50 kHz	1 km (TIA/EIA-422-B)
STATUS output	Yes	Yes	Yes
High level	Encoder OK	Encoder OK	Encoder OK
Low level	Warning/Failure	Warning/Failure	Warning/Failure

[1]TTL output comply to the RS-422 standard when differential transmission is used

NA=Not Available

Output circuit

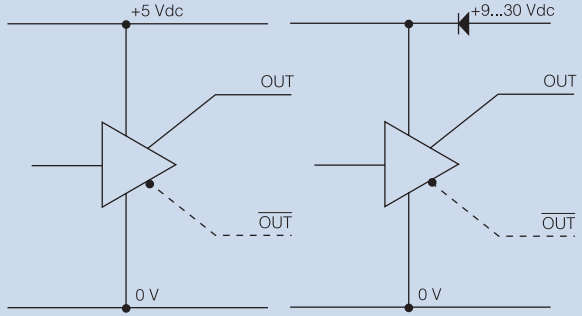

Output signals

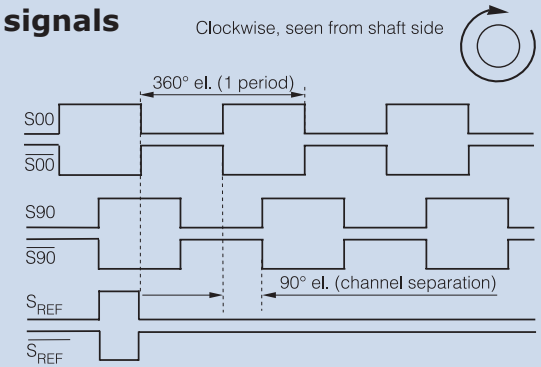

Status outputs

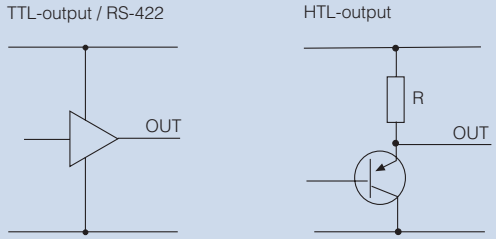

Leine & Linde *ISO 9001 / ISO 14001 certified*

Box 8, SE-64521 Strängnäs, Sweden. Phone: +46-(0)152-26500. Fax: +46-(0)152-26505. E-mail: info@leinelinde.se

www.leinelinde.se

Dimensions

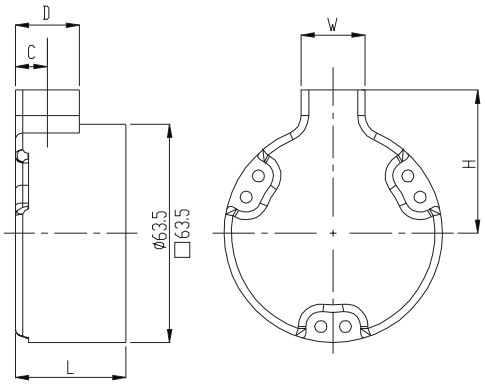

Connector	Orientation	L	H	W	D	C
Cable	Radial	29.4	34	17	17	8.5
	Axial	38.9	–	–	–	–
EML	Radial	29.4	32	27	27	13.5
	Axial	38.9	–	–	–	–
MS 7p	Radial	–	–	–	–	–
	Axial	38.9	–	–	–	–
MS 10p	Radial	–	–	–	–	–
	Axial	43.9	–	–	–	–

Flanges

64, round

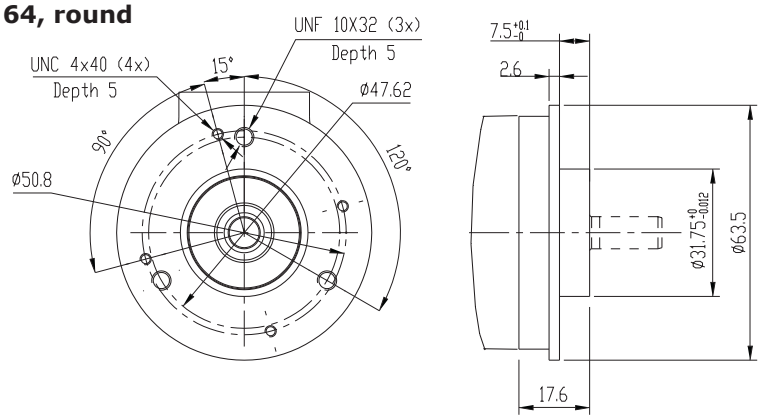

65, square

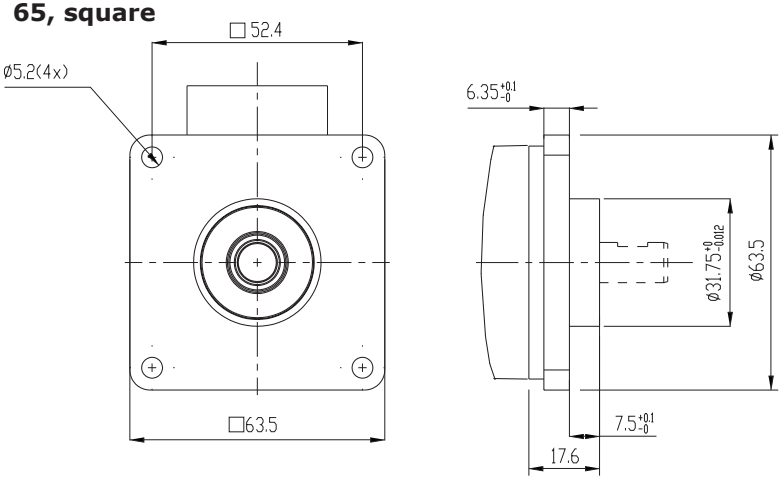

505 — Ruggedized Shaft encoder, Incremental

Connectors

Cable
5x2x0,25 shielded

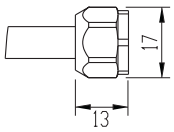

12pin EML

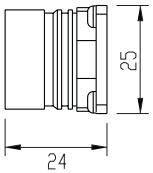

7pin MS

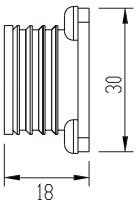

7pin MS sp

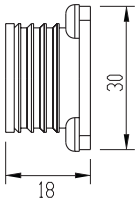

10pin MS

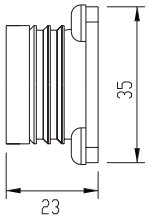

Shafts

8 mm round

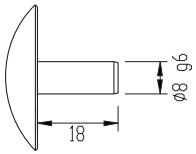

9.52 mm round

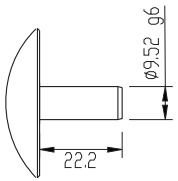

10 mm with face

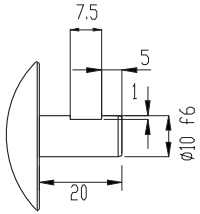

Various combinations / examples

RSI 505 64
8 mm round, radial MS

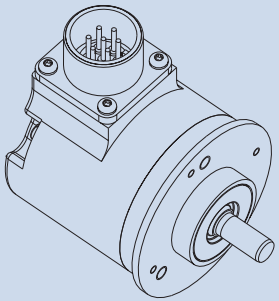

RSI 505 65
10 mm with face, radial MS

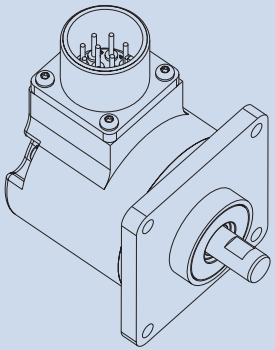

Ordering information Tick your choice

Type		RSI 505				
Shaft		Ø 8 round	Ø 9.52 round	Ø 10 with face		
Flange		64, Round	65, Square			
Electronics[1]	Supply	5Vdc	9-30Vdc			
	Output	TTL	HTL	RS-422		
Connection		Cable	12 pin EML	7 pin MS	7 pin MS sp	10 pin MS
Connecting direction		Axial/Radial	Axial/Radial	Axial/Radial	Axial/Radial	Axial/Radial
Line count		1..5000	5001..10 000			

[1] Possible combinations: 5Vdc/TTL, 9-30Vdc/HTL or 9-30Vdc/RS-422

Please, specify line count and cable length when ordering
Ordering example: RSI 505 ø8 round 65 Square 5Vdc TTL 12 pin EML Axial 1024

04-08-31 / Specifications can be changed without prior notice.

Leine & Linde *ISO 9001 / ISO 14001 certified*
Box 8, SE-64521 Strängnäs, Sweden. Phone: +46-(0)152-26500. Fax: +46-(0)152-26505. E-mail: info@leinelinde.se
www.leinelinde.se